Heritage Wide Bench

Model 89103/YARRA - Heritage Wide Bench

DRAFFIN
Street Furniture

The Heritage Wide Bench follows the same heavy duty design and styling as the Heritage Seat. Heavy gauge material is used in the fully welded frames to produce a rock solid frame that supports battens that are laid across a comfortable curved seating profile. Built to last, the Heritage Bench has deluxe specifications and materials that create an extremely dependable public bench.

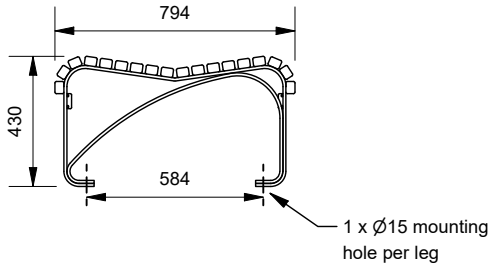

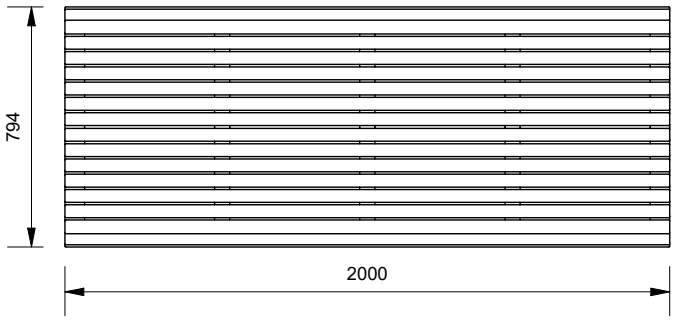

Batten Material (See batten guide)
40mm x 30mm
☐ Spotted Gum
☐ Enviroslat
☐ Aluminium
☐ Powdercoated Aluminium
☐ Timber-Look Aluminium - Alpine Ash
☐ Timber-Look Aluminium - Ironbark
☐ Timber-Look Aluminium - Mountain Gum

Frame Material
☐ Galvanised Mild Steel
☐ 304 Stainless Steel Brushed
☐ 304 Stainless Steel Blasted
☐ 316 Stainless Steel Brushed
☐ 316 Stainless Steel Blasted

Mounting Options
☐ Bolt Down
☐ In-ground Anchors

Other Options
☐ Powdercoat Frames (See colour guide)
☐ Electropolish Frames

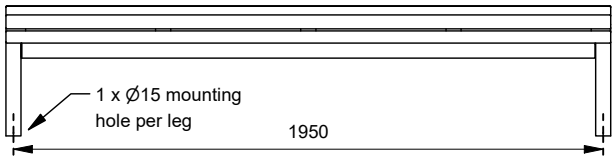

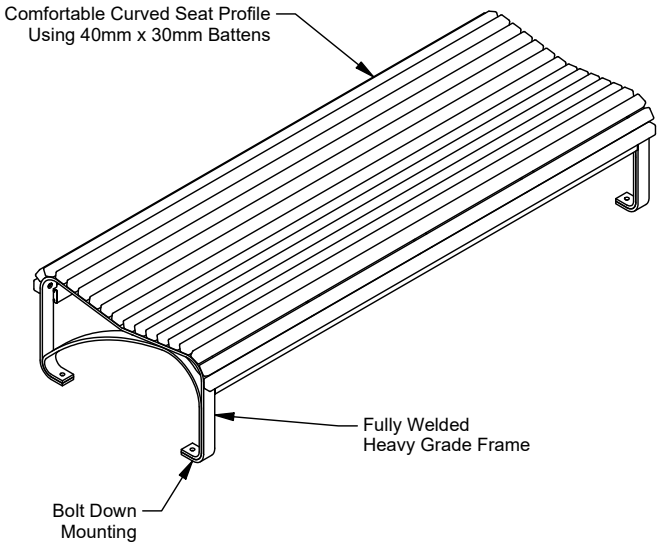

More information:
Go to the website for spec inspiration.
89103/YARRA - Heritage Wide Bench
https://draffin.com.au/product/heritage-wide-bench/

Batten Guide
https://draffin.com.au/batten-guide/

Stainless Steel Guide
https://draffin.com.au/stainless-steel-guide/

Colour
https://draffin.com.au/colour-guide/

DDA guide
https://draffin.com.au/dda/

© Draffin Street Furniture 2024
Phone: (03) 9720 1033 or 1300 372 334
Email: admin@draffin.com.au
www.draffin.com.au