Airlie Freestanding Bench Seat

89051/FS - Airlie Freestanding Bench Seat

DRAFFIN Street Furniture

Airlie Freestanding Seat with Back has a flat bar frame for bolt-down and freestanding utilisation. Two timber profiles create a unique and comfortable seat profile. The Airlie range provides plenty of standard options to suit a wide variety of open space applications.

Batten Material (See batten guide)
110mmx30mm & 40mmx30mm
☐ Spotted Gum
☐ Anodised Aluminium
☐ Powdercoated Aluminium (See colour guide)
☐ Timber-Look Aluminium - Alpine Ash
☐ Timber-Look Aluminium - Mountain Gum
☐ Timber-Look Aluminium - Ironbark
☐ Enviroslat

Bench Length
☐ 1790mm
☐ 1000mm
☐ 600mm

Frame Material
☐ Galvanised Mild Steel
☐ 304 Stainless Steel
☐ 316 Stainless Steel

Mounting Options
☐ Bolt Down
☐ Freestanding

Other Options
☐ Powdercoat Frames (See colour guide)
☐ Armrests
☐ Custom Dimensions

Side

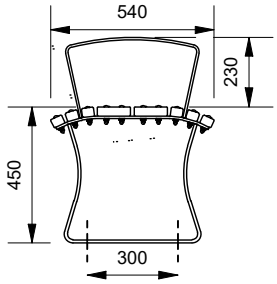

Plan

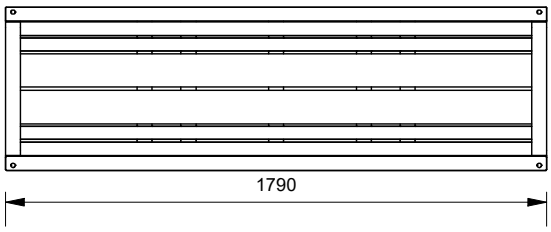

Front View

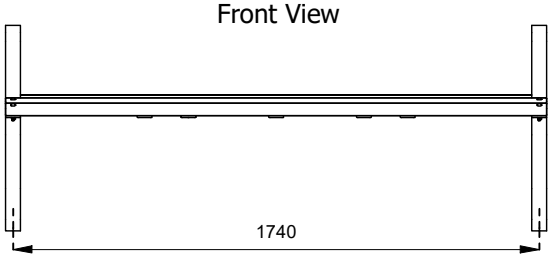

1790mm Model

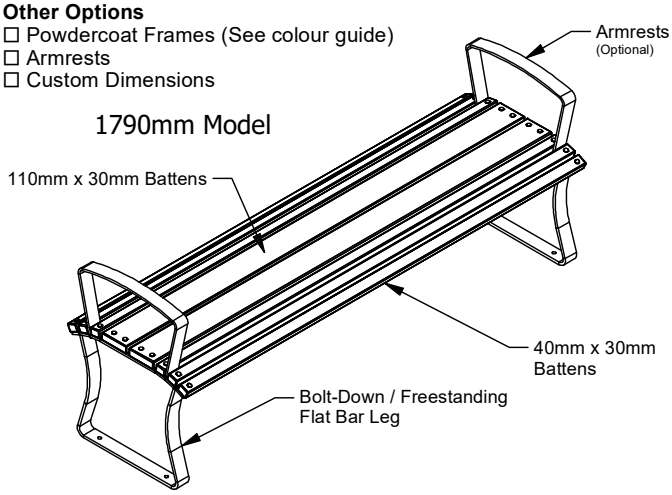

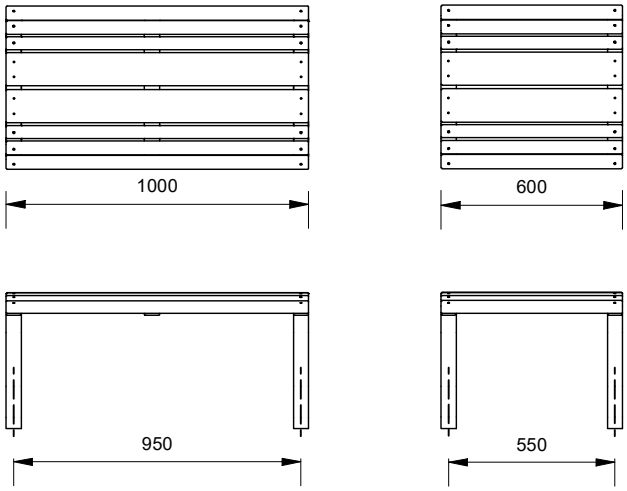

1000mm Model

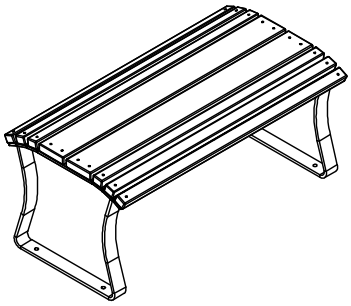

600mm Model

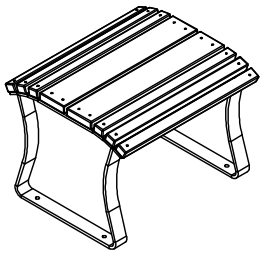

More information:
Go to the website for spec inspiration.
88051/FS - Airlie Freestanding Bench Seat
https://draffin.com.au/product/airlie-bench-freestanding/

Batten Guide
https://draffin.com.au/batten-guide/

Powdercoat Colour Guide
https://draffin.com.au/colour-guide/

Stainless Steel Guide
https://draffin.com.au/stainless-steel-guide/

DDA guide
https://draffin.com.au/dda/

© Draffin Street Furniture 2025

Phone: (03) 9720 1033 or 1300 372 334
Email: admin@draffin.com.au
www.draffin.com.au